© 2026 All rights reserved.
This document may not, in whole or in part, be copied, photocopied, reproduced, translated or converted to any electronic or machine readable from without prior written permission of Mehmet Günce Akkoyun.
Engineer contact : akkoyun@me.com

Property of Gunce Akkoyun

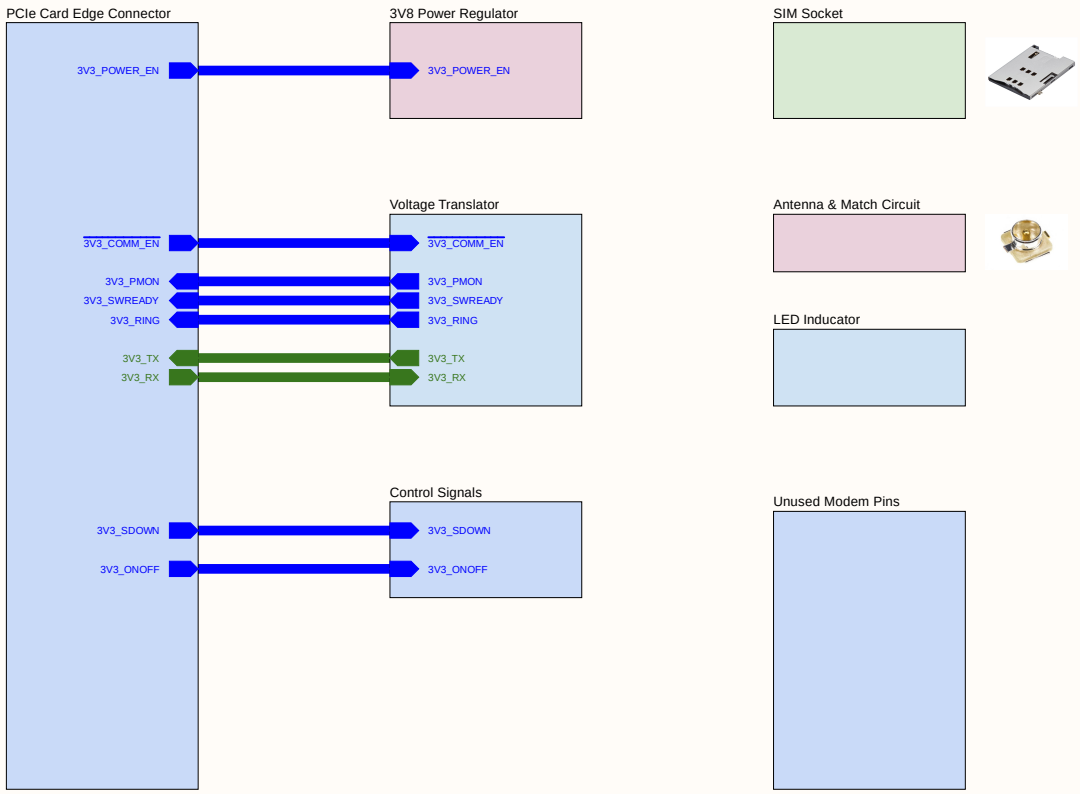

www.github.com/akkoyun/B101BA

GSM IoT Block Diagram		Engineer :	Gunce Akkoyun
		Customer :	Gunce Akkoyun
Size : A4	Project : qSlot IoT 4G Modem	Product ID :	--
		Module ID :	B101BA
Date : 18.02.2026	Time : 00:07:58 Page : 1 / 10	Version :	00.00.01
File : GSM IoT Block Diagram.SchDoc		Revision :	R1

Gunce Akkoyun
Seker Mah. Ayyildiz Sok
Silverstar Apt. 7/7
Selcuklu / Konya Türkiye

Copyright 2024 Mehmet Gunce Akkoyun (Commercial Secret)

© 2026 All rights reserved.
This document may not, in whole or in part, be copied, photocopied, reproduced, translated or converted to any electronic or machine readable from without prior written permission of Mehmet Günce Akkoyun.
Engineer contact : akkoyun@me.com

Property of Gunce Akkoyun

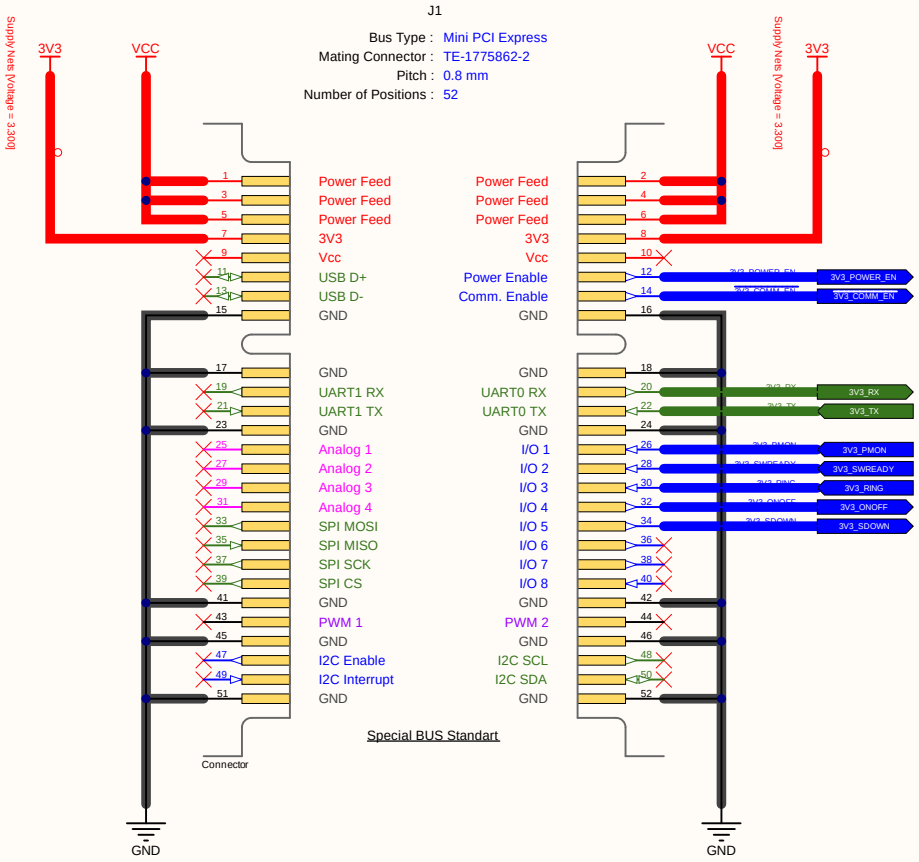

www.github.com/akkoyun/B101BA

Card Edge Connector		Engineer : Gunce Akkoyun	Gunce Akkoyun
		Customer : Gunce Akkoyun	Seker Mah. Ayyildiz Sok
Size : A4	Project : qSlot IoT 4G Modem	Product ID : --	Silverstar Apt. 7/7
		Module ID : B101BA	Selcuklu / Konya Türkiye
Date : 18.02.2026	Time : 00:07:58 / Page : 2 / 9	Version : 00.00.01	
File : Edge_Connector.SchDoc		Revision : R1	

Copyright 2024 Mehmet Gunce Akkoyun (Commercial Secret)

© 2026 All rights reserved.
This document may not, in whole or in part, be copied, photocopied, reproduced, translated or converted to any electronic or machine readable from without prior written permission of Mehmet Günce Akkoyun.
Engineer contact : akkoyun@me.com

Property of Gunce Akkoyun

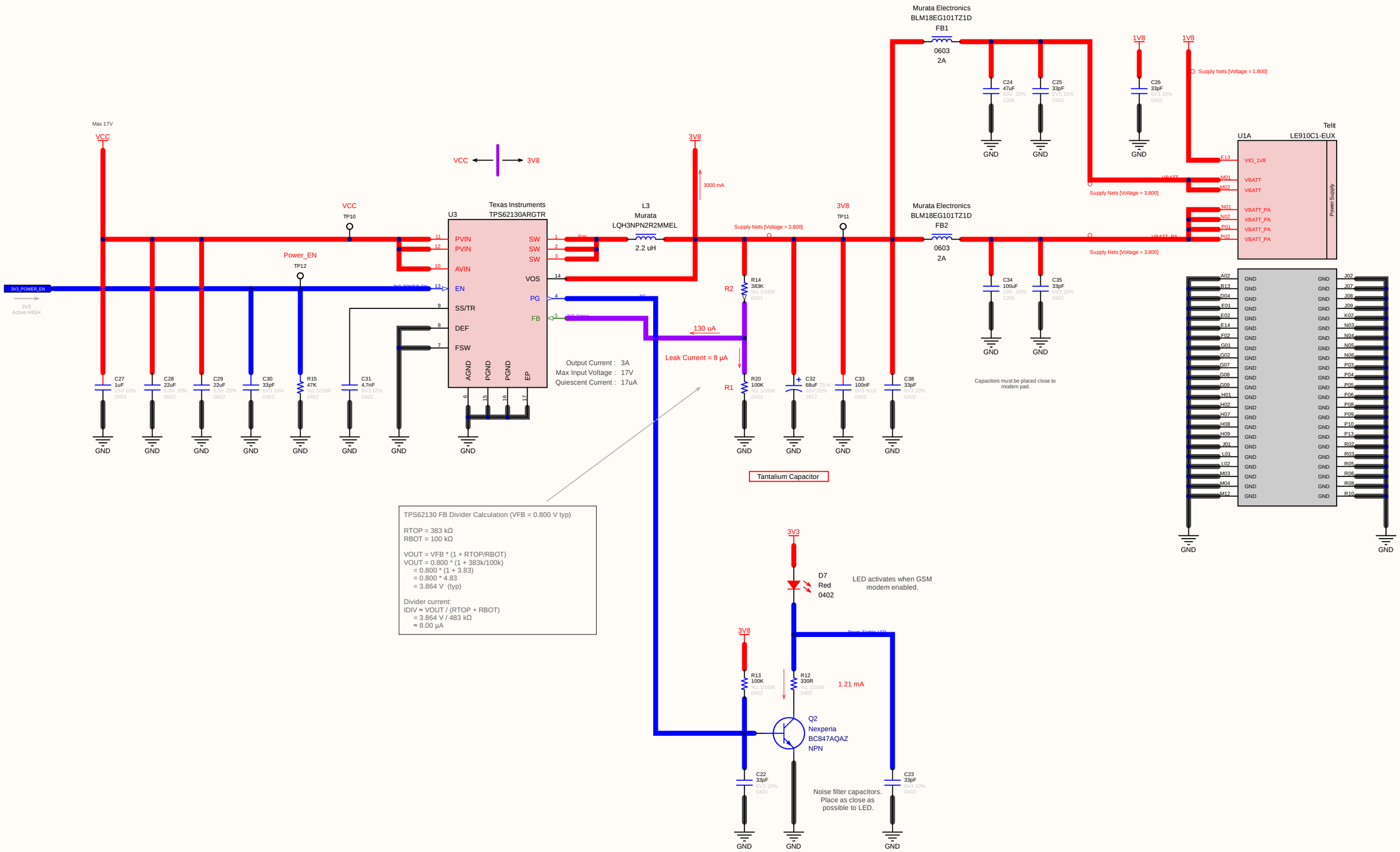

TPS62130 FB Divider Calculation (VFB = 0.800 V typ)

RTOP = 383 kΩ
RBOT = 100 kΩ

VOUT = VFB * (1 + RTOP/RBOT)
VOUT = 0.800 * (1 + 383k/100k)
= 0.800 * (1 + 3.83)
= 0.800 * 4.83
= 3.864 V (typ)

Divider current:
IDIV = VOUT / (RTOP + RBOT)
= 3.864 V / 483 kΩ
≈ 8.00 µA

www.github.com/akkoyun/B101BA

3V8 Power Regulator		Engineer :	Gunce Akkoyun
		Customer :	Gunce Akkoyun
Size : A4	Project : qSlot IoT 4G Modem	Product ID :	--
		Module ID :	B101BA
Date : 18.02.2026	Time : 00:07:58 Page : 3 / 9	Version :	00.00.01
File : 3V8_Power_Regulator.SchDoc		Revision :	R1

Gunce Akkoyun
Seker Mah. Ayyildiz Sok
Silverstar Apt. 7/7
Selcuklu / Konya Türkiye

Copyright 2024 Mehmet Gunce Akkoyun (Commercial Secret)

© 2026 All rights reserved.
This document may not, in whole or in part, be copied, photocopied, reproduced, translated or converted to any electronic or machine readable from without prior written permission of Mehmet Günce Akkoyun.
Engineer contact : akkoyun@me.com

Property of Gunce Akkoyun

Manufacturer Note:

LE910C1 GSM Modem signal and communication lines are 1V8 voltage level. MCU signal and communication lines are 3V3 voltage level. So we need to convert all signal and communication lines to acceptable voltage level. We also need a trisstate translator against to backpower LE910 GSM modem.

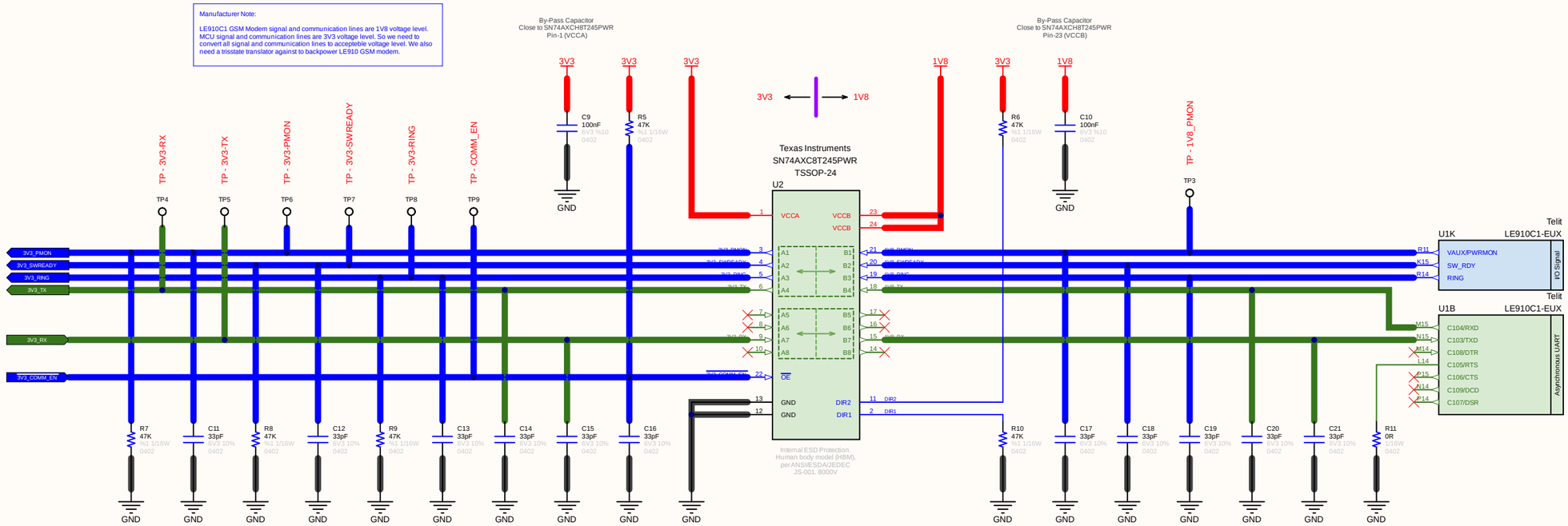

Noise filter capacitors are placed close to modem pad.

```
OE      DIR1      DIR2       Operation
-----------------------------------------------
H        X        X          Disabled (Hi-Z)
L        L        L          All B to A
L        L        H          B to A / A to B
L        H        L          All A to B
L        H        H          A to B / B to A
```

www.github.com/akkoyun/B101BA

Voltage Translator		Engineer : Gunce Akkoyun	Gunce Akkoyun
		Customer : Gunce Akkoyun	Seker Mah. Ayyildiz Sok
Size : A4	Project : qSlot IoT 4G Modem	Product ID : --	Silverstar Apt. 7/7
		Module ID : B101BA	Selcuklu / Konya Türkiye
Date : 18.02.2026	Time : 00:07:58 Page : 4 / 9	Version : 00.00.01	
File : Voltage_Translator.SchDoc		Revision : R1	

Copyright 2024 Mehmet Gunce Akkoyun (Commercial Secret)

© 2026 All rights reserved.
This document may not, in whole or in part, be copied, photocopied, reproduced, translated or converted to any electronic or machine readable from without prior written permission of Mehmet Günce Akkoyun.
Engineer contact : akkoyun@me.com

Property of Gunce Akkoyun

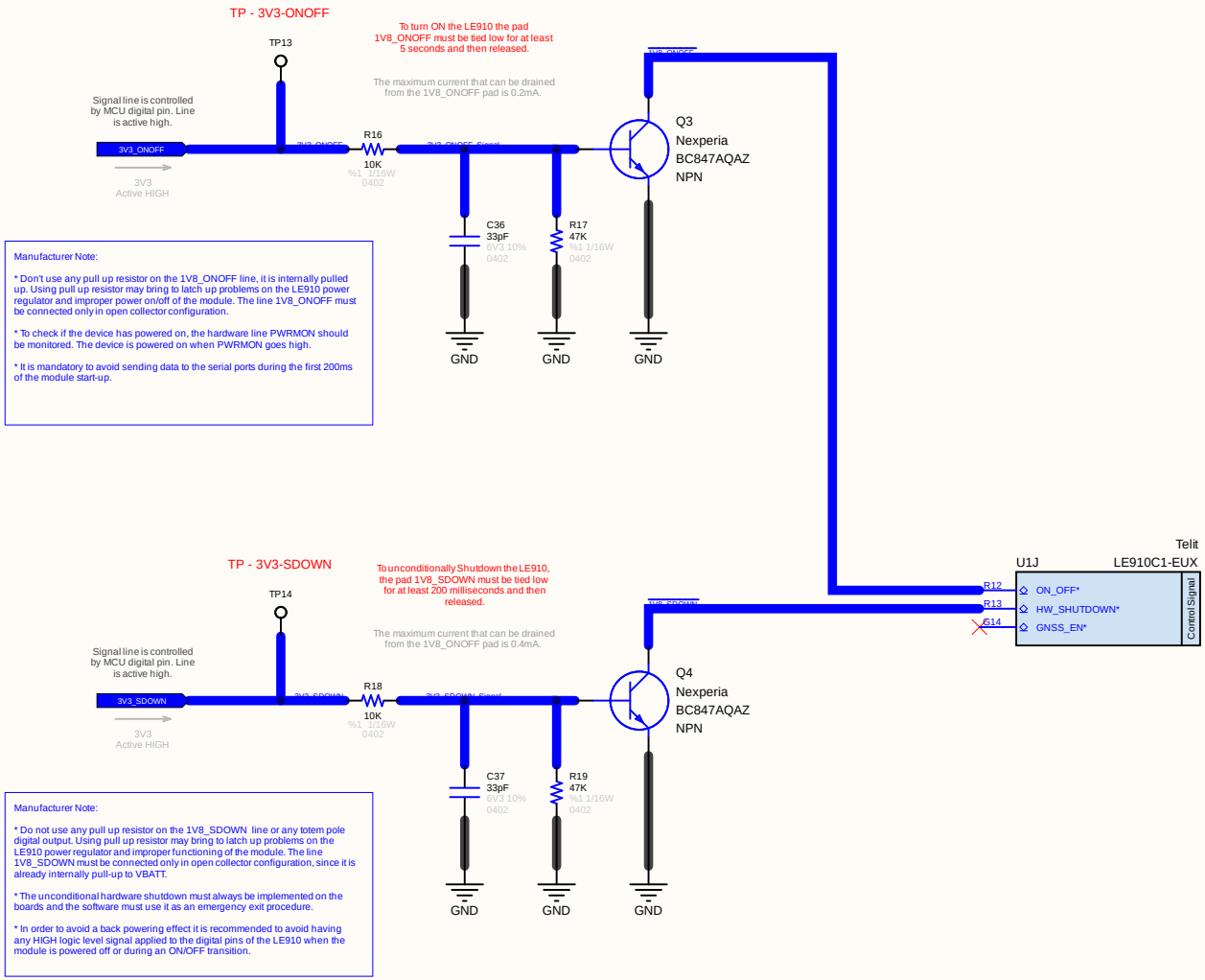

www.github.com/akkoyun/B101BA

Control Signals		Engineer :	Gunce Akkoyun
		Customer :	Gunce Akkoyun
Size : A4	Project : qSlot IoT 4G Modem	Product ID :	--
		Module ID :	B101BA
Date : 18.02.2026	Time : 00:07:58	Page : 5 / 9	Version : 00.00.01
File : Control_Signals.SchDoc			Revision : R1

Gunce Akkoyun
Seker Mah. Ayyildiz Sok
Silverstar Apt. 7/7
Selcuklu / Konya Türkiye

Copyright 2024 Mehmet Gunce Akkoyun (Commercial Secret)

© 2026 All rights reserved.
This document may not, in whole or in part, be copied, photocopied, reproduced, translated or converted to any electronic or machine readable from without prior written permission of Mehmet Günce Akkoyun.
Engineer contact : akkoyun@me.com

Property of Gunce Akkoyun

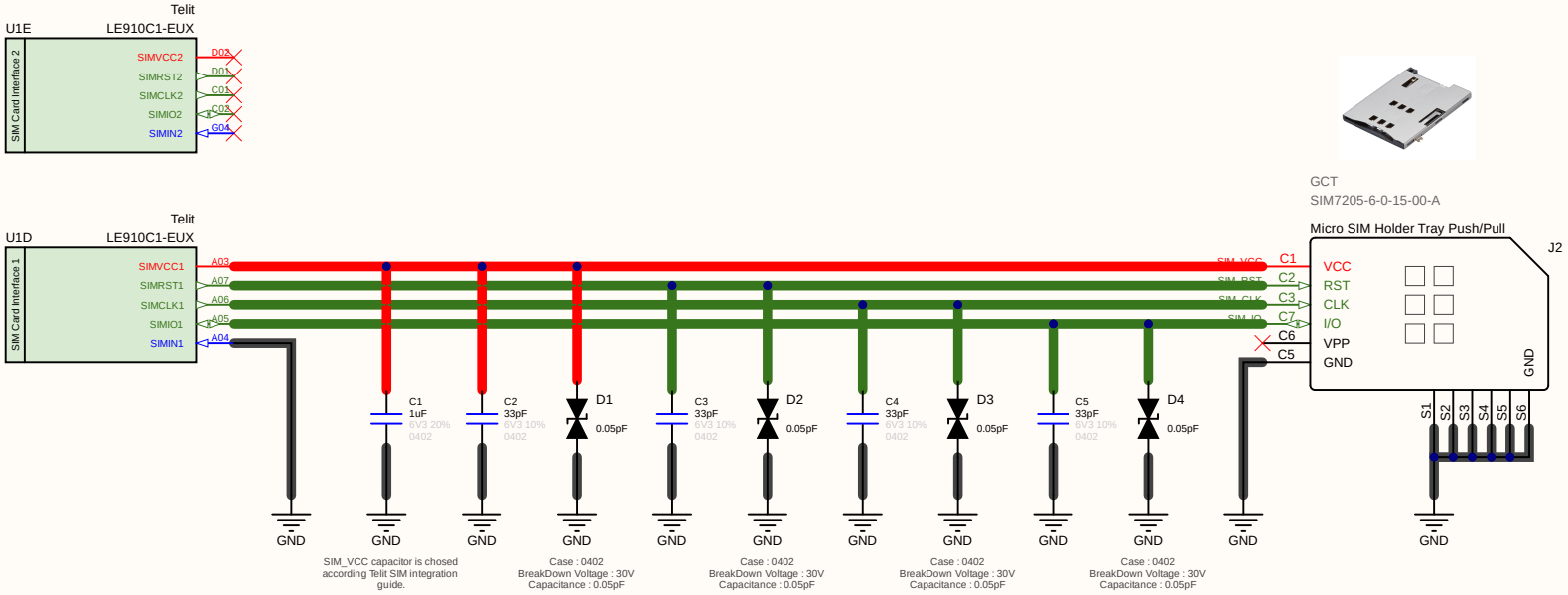

www.github.com/akkoyun/B101BA

SIM Tray			Engineer : Gunce Akkoyun
			Customer : Gunce Akkoyun
Size : A4	Project : qSlot IoT 4G Modem		Product ID : --
			Module ID : B101BA
Date : 18.02.2026	Time : 00:07:58	Page : 6 / 9	Version : 00.00.01
File : SIM_Socket.SchDoc			Revision : R1

Gunce Akkoyun
Seker Mah. Ayyildiz Sok
Silverstar Apt. 7/7
Selcuklu / Konya Türkiye

Copyright 2024 Mehmet Gunce Akkoyun (Commercial Secret)

© 2026 All rights reserved.
This document may not, in whole or in part, be copied, photocopied, reproduced, translated or converted to any electronic or machine readable from without prior written permission of Mehmet Günce Akkoyun.
Engineer contact : akkoyun@me.com

Property of Gunce Akkoyun

Width Constraint [Pref Width = 0.77mm Min Width = 0.77mm Max Width = 0.77mm]
Power Plane Clearance [Clearance = 5.906mil]
Impedance Constraint [Min = 49.00 Max = 50.00]

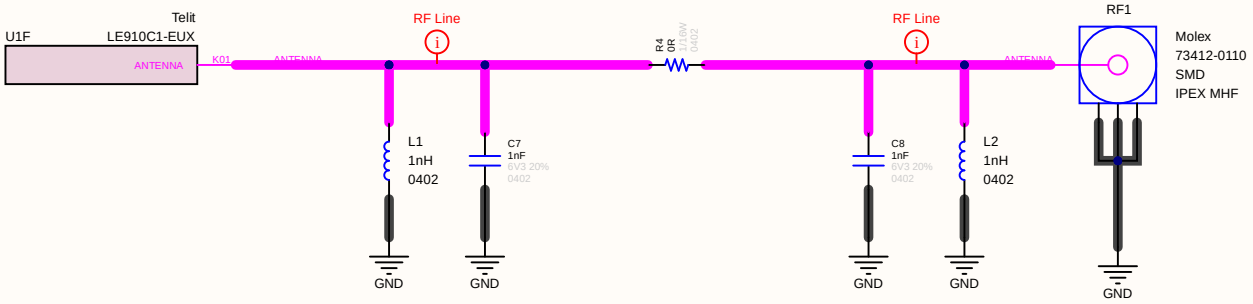

www.github.com/akkoyun/B101BA

GSM Antenna & Match Circuit		Engineer :	Gunce Akkoyun
		Customer :	Gunce Akkoyun
Size : A4	Project : qSlot IoT 4G Modem	Product ID :	--
		Module ID :	B101BA
Date : 18.02.2026	Time : 00:07:59 Page : 7 / 9	Version :	00.00.01
File : Antenna.SchDoc		Revision :	R1

Gunce Akkoyun
Seker Mah. Ayyildiz Sok
Silverstar Apt. 7/7
Selcuklu / Konya Türkiye

Copyright 2024 Mehmet Gunce Akkoyun (Commercial Secret)

© 2026 All rights reserved.
This document may not, in whole or in part, be copied, photocopied, reproduced, translated or converted to any electronic or machine readable from without prior written permission of Mehmet Günce Akkoyun.
Engineer contact : akkoyun@me.com

Property of Gunce Akkoyun

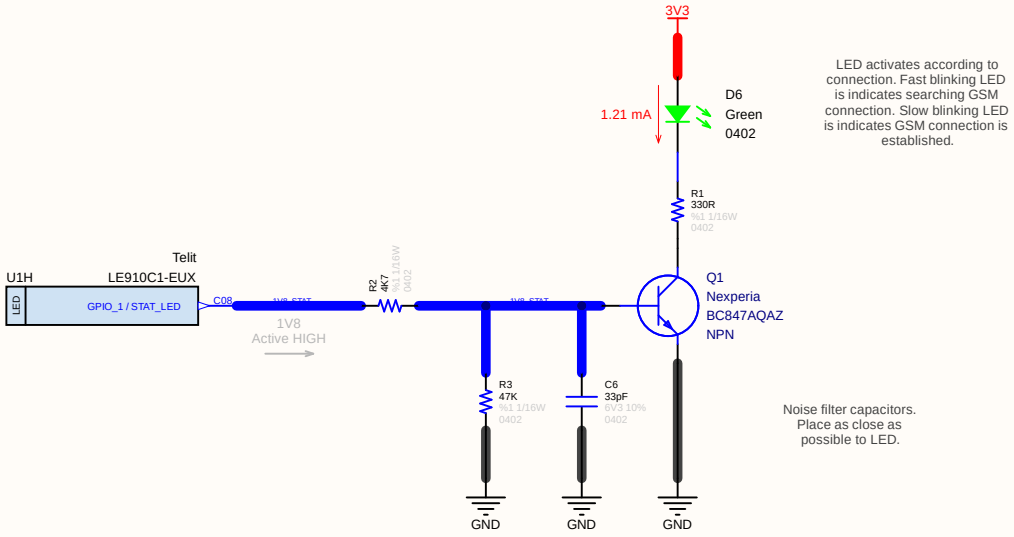

www.github.com/akkoyun/B101BA

Modem LED Driver		Engineer :	Gunce Akkoyun
		Customer :	Gunce Akkoyun
Size : A4	Project : qSlot IoT 4G Modem	Product ID :	--
		Module ID :	B101BA
Date : 18.02.2026	Time : 00:07:59	Page : 8 / 9	Version : 00.00.01
File : Stat_LED_Driver.SchDoc		Revision :	R1

Gunce Akkoyun
Seker Mah. Ayyildiz Sok
Silverstar Apt. 7/7
Selcuklu / Konya Türkiye

Copyright 2024 Mehmet Gunce Akkoyun (Commercial Secret)

© 2026 All rights reserved.
This document may not, in whole or in part, be copied, photocopied, reproduced, translated or converted to any electronic or machine readable from without prior written permission of Mehmet Günce Akkoyun.
Engineer contact : akkoyun@me.com

Property of Gunce Akkoyun

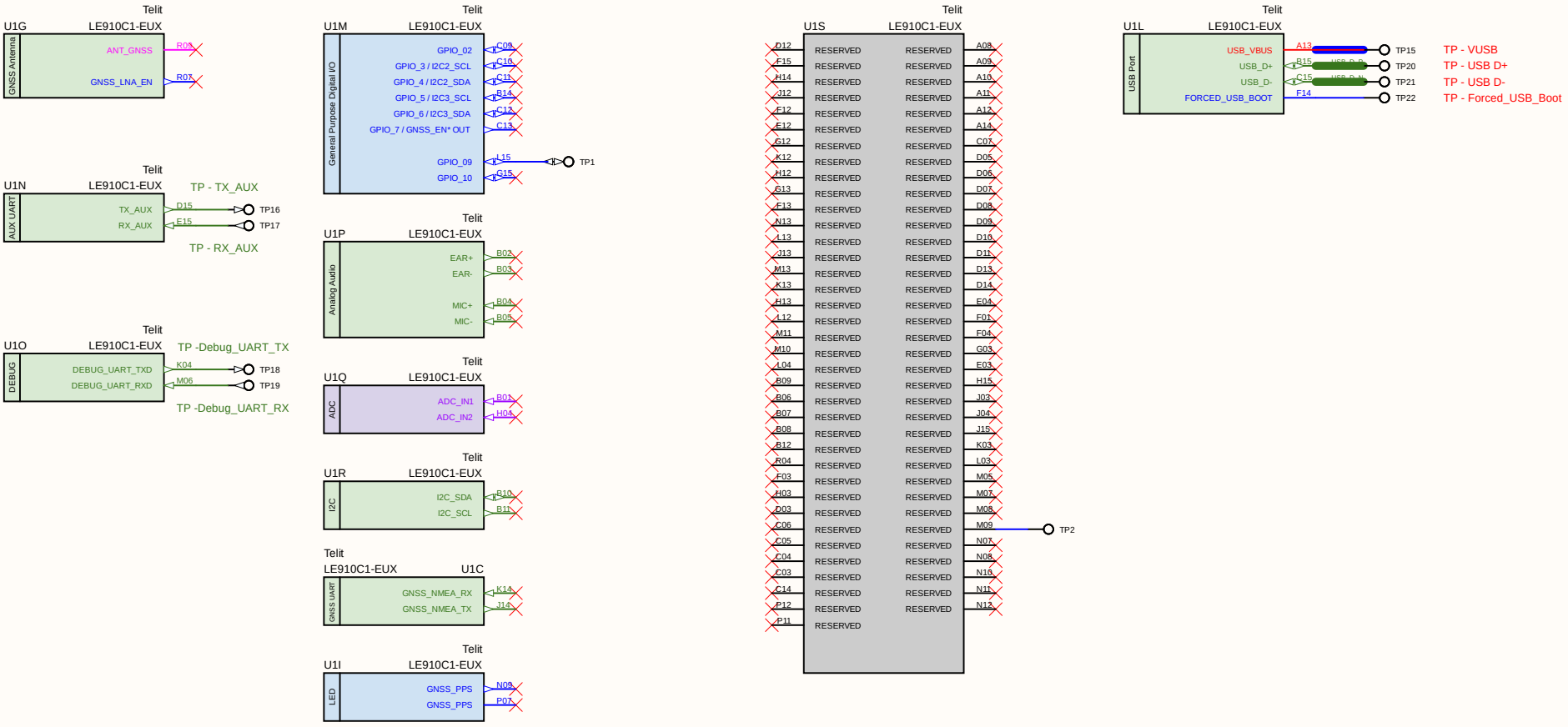

www.github.com/akkoyun/B101BA

Unused Modem Pins			Engineer : Gunce Akkoyun
			Customer : Gunce Akkoyun
Size : A4	Project : qSlot IoT 4G Modem		Product ID : --
			Module ID : B101BA
Date : 18.02.2026	Time : 00:07:59	Page : 9 / 9	Version : 00.00.01
File : Unused_Modem_Pins.SchDoc			Revision : R1

Gunce Akkoyun
Seker Mah. Ayyildiz Sok
Silverstar Apt. 7/7
Selcuklu / Konya Türkiye

Copyright 2024 Mehmet Gunce Akkoyun (Commercial Secret)